REG	STATE	PROJECT	SHEET NO.	TOTAL SHEETS

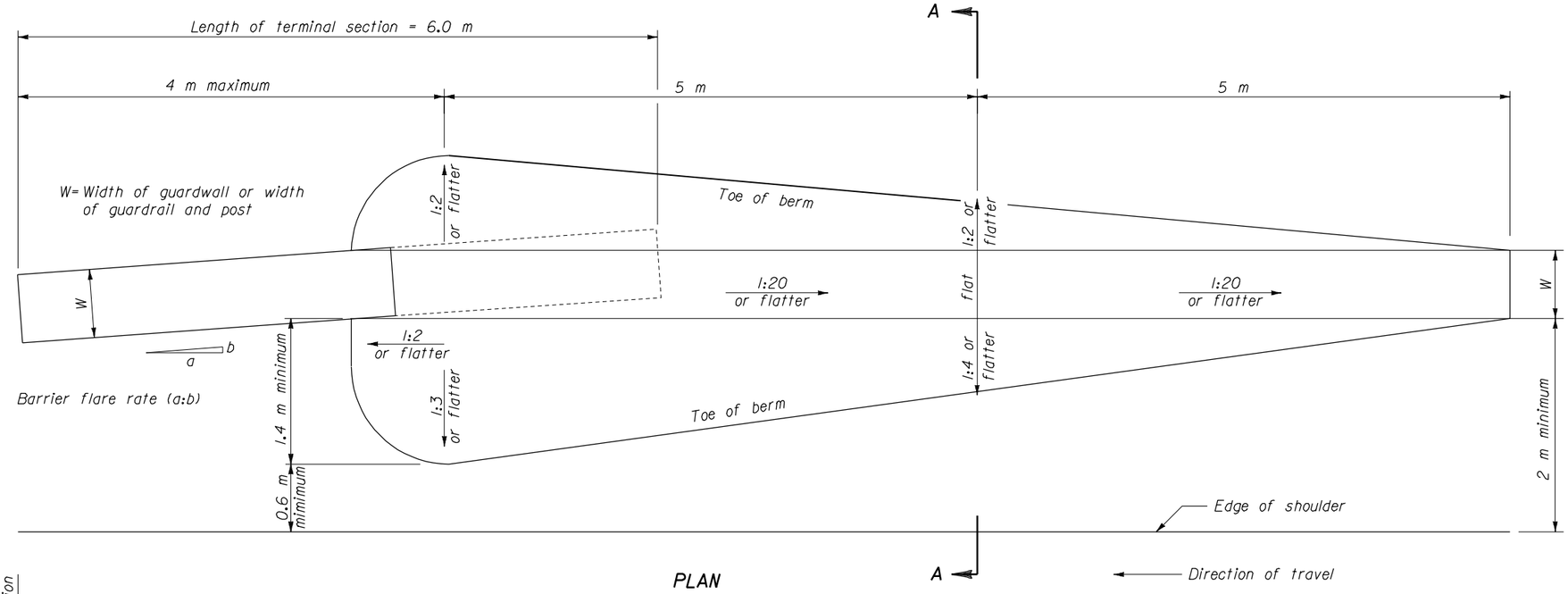

PLAN

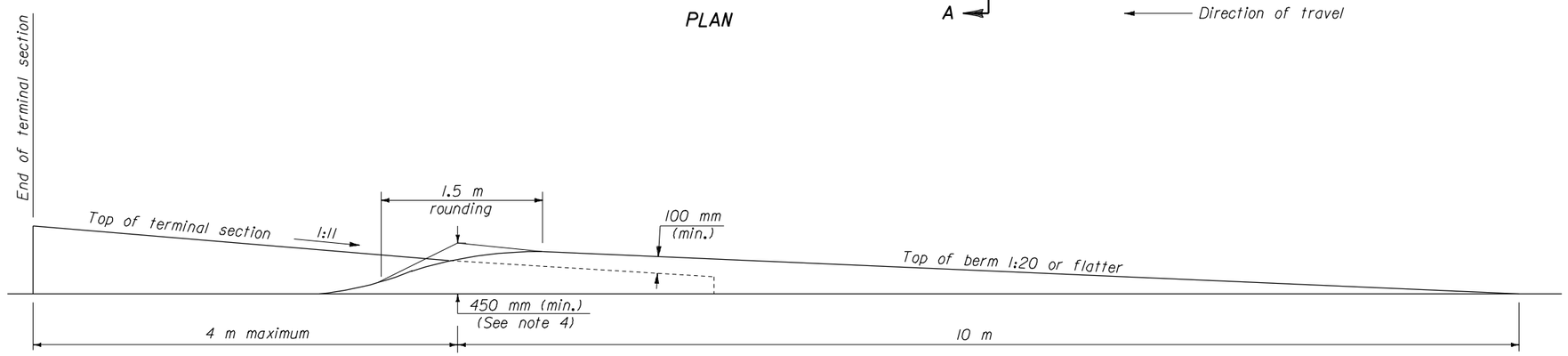

ELEVATION

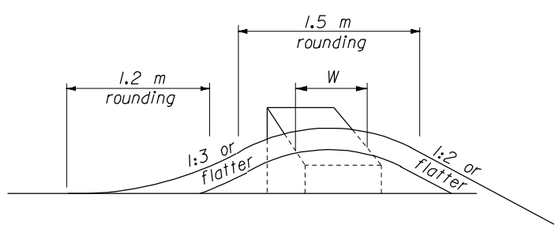

SECTION A-A

NOTE:

1. Dimensions not labeled are in millimeters.
2. Vary the actual dimensions of the berm according to the variable dimensions shown and as directed.
3. See Standards M617-61, M618-3, and M620-2 for details of specified roadside barrier and terminal section.
4. If the taper on the top of the terminal section is steeper than 1:11 the minimum height of the berm is 600 mm.

NO SCALE

U.S. DEPARTMENT OF TRANSPORTATION
FEDERAL HIGHWAY ADMINISTRATION
FEDERAL LANDS HIGHWAY OFFICE

METRIC STANDARD

EARTH BERM FOR ROADSIDE BARRIER TERMINAL SECTIONS

REVISED:

STANDARD
M204-1

MST204011.DGN

REG	STATE	PROJECT	SHEET NO.	TOTAL SHEETS

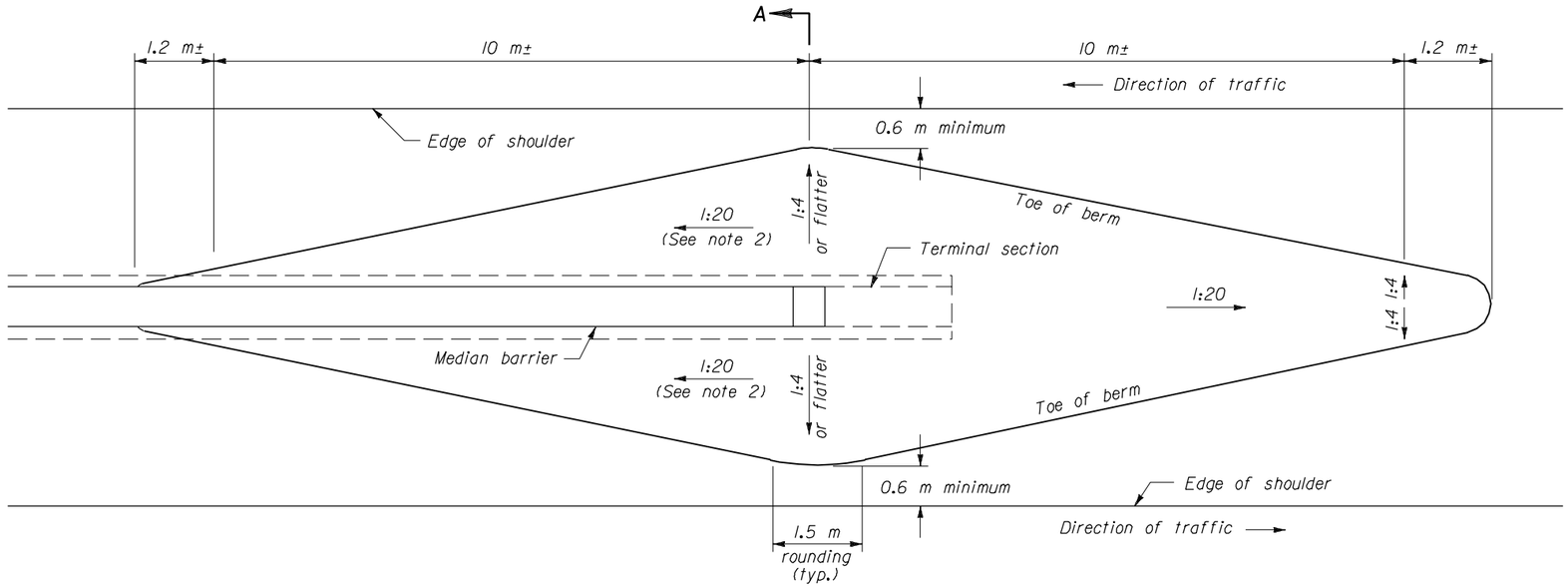

PLAN

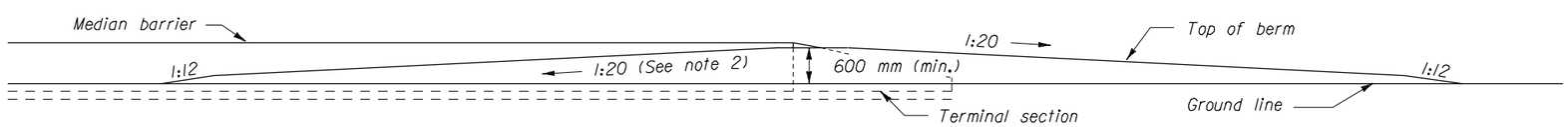

ELEVATION

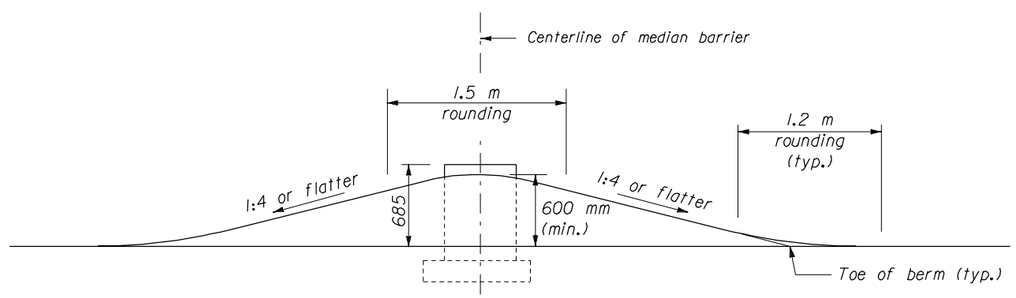

SECTION A-A

NOTE:

1. Dimensions not labeled are in millimeters.
2. The 1:20 slope is the desired slope. The slope may be adjusted to meet field conditions as directed, (maximum slope 1:6).
3. See Standards M618-3 and M620-2 for details of specified roadside barrier and terminal section.

NO SCALE

U.S. DEPARTMENT OF TRANSPORTATION
FEDERAL HIGHWAY ADMINISTRATION
FEDERAL LANDS HIGHWAY OFFICE

METRIC STANDARD

EARTH BERM FOR MEDIAN BARRIER TERMINAL SECTIONS

REVISED:

STANDARD
M204-2

MST204O2.DGN

REG	STATE	PROJECT	SHEET NO.	TOTAL SHEETS

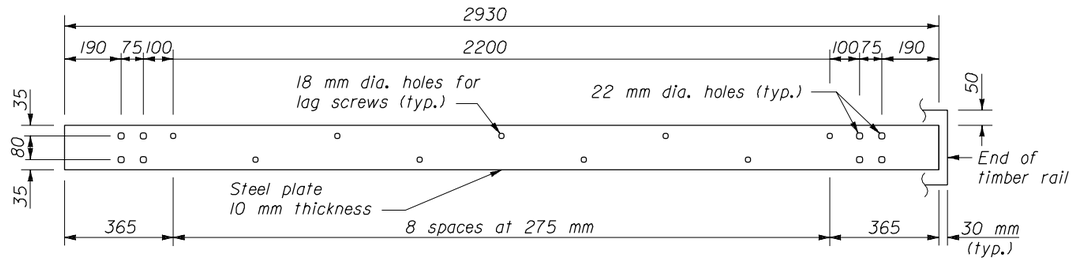

STEEL RAIL

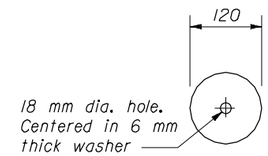

PLATE WASHER

NOTE:

1. Dimensions not labeled are in millimeters.
2. Use the Type A, blocked-out, system or the Type B, non-blocked-out, system as specified.
3. Use weathering steel for all structural steel and fastener hardware as specified.
4. Place a terminal section (See Standards M617-61 and M617-62) on both approach and trailing ends of barrier installations.
5. Furnish hardware in the metric sizes shown. Equivalent imperial sizes may be used when metric sizes are not available.

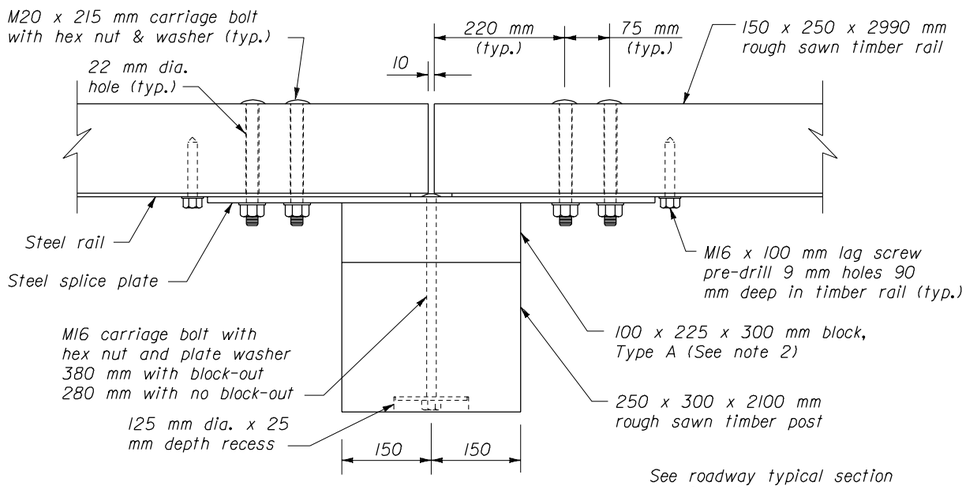

PLAN

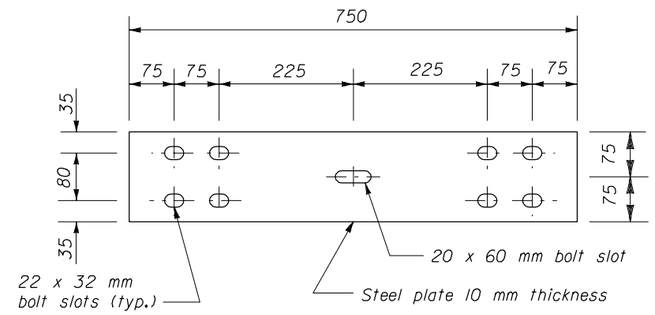

STEEL SPLICE PLATE

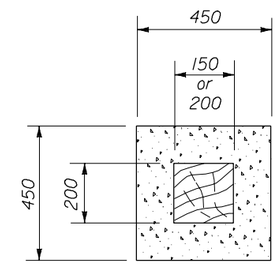

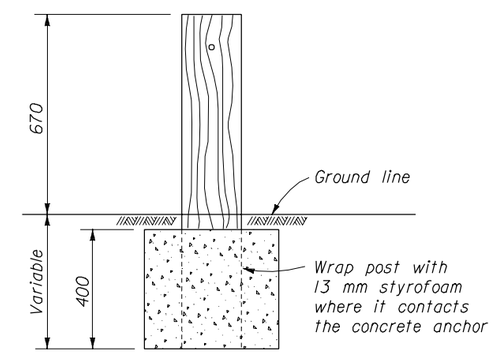

Use 550 mm diameter round anchor or 500 mm square anchor. Reduced size acceptable in solid rock.

CONCRETE ANCHOR FOR SHORT GUARDRAIL POST

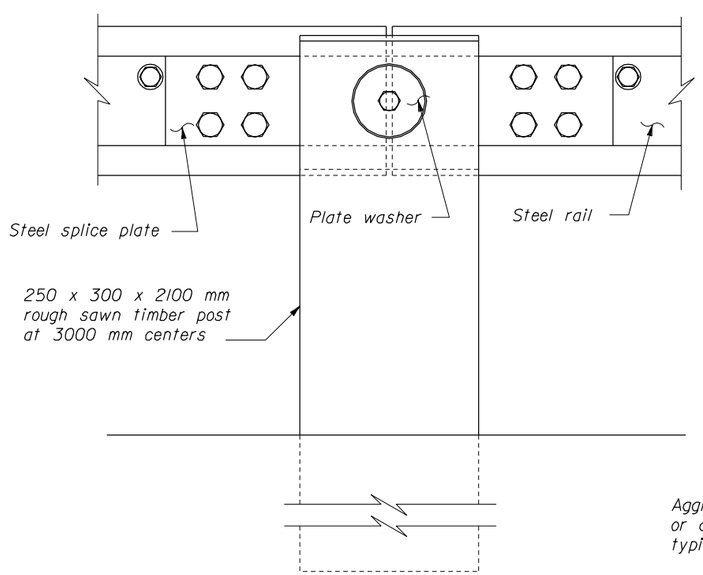

ELEVATION

POST CONNECTION

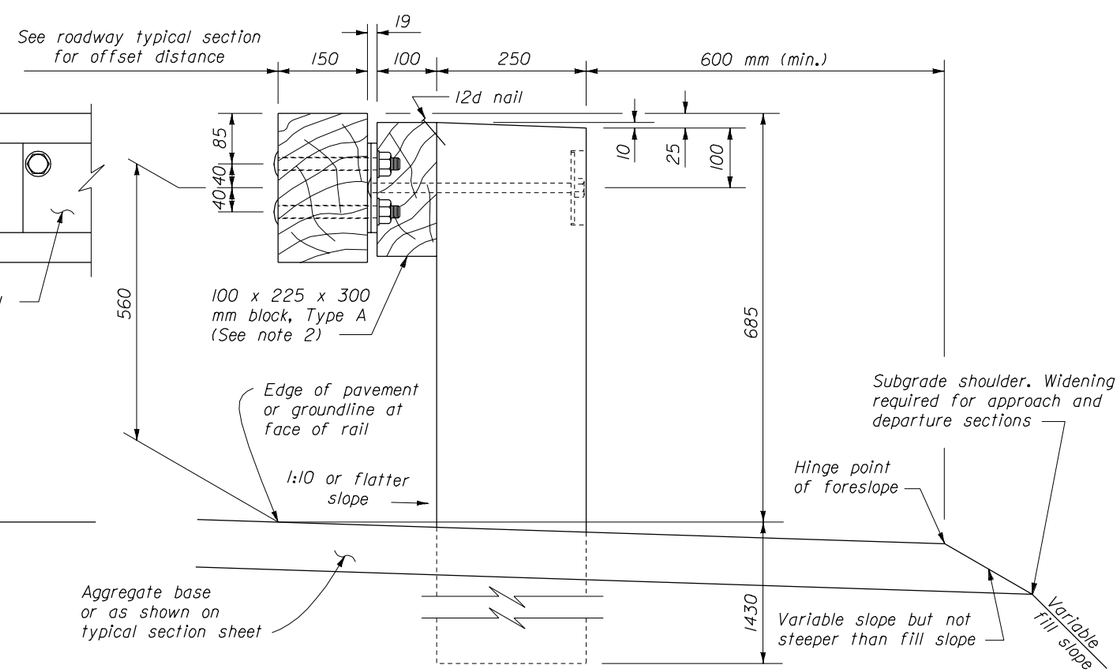

TYPICAL GUARDRAIL CROSS SECTION

NO SCALE

U.S. DEPARTMENT OF TRANSPORTATION
FEDERAL HIGHWAY ADMINISTRATION
FEDERAL LANDS HIGHWAY OFFICE

METRIC STANDARD

STEEL-BACKED TIMBER GUARDRAIL, TYPE A & TYPE B

REVISED:

STANDARD M617-60

MST617G0.DGN

REG	STATE	PROJECT	SHEET NO.	TOTAL SHEETS

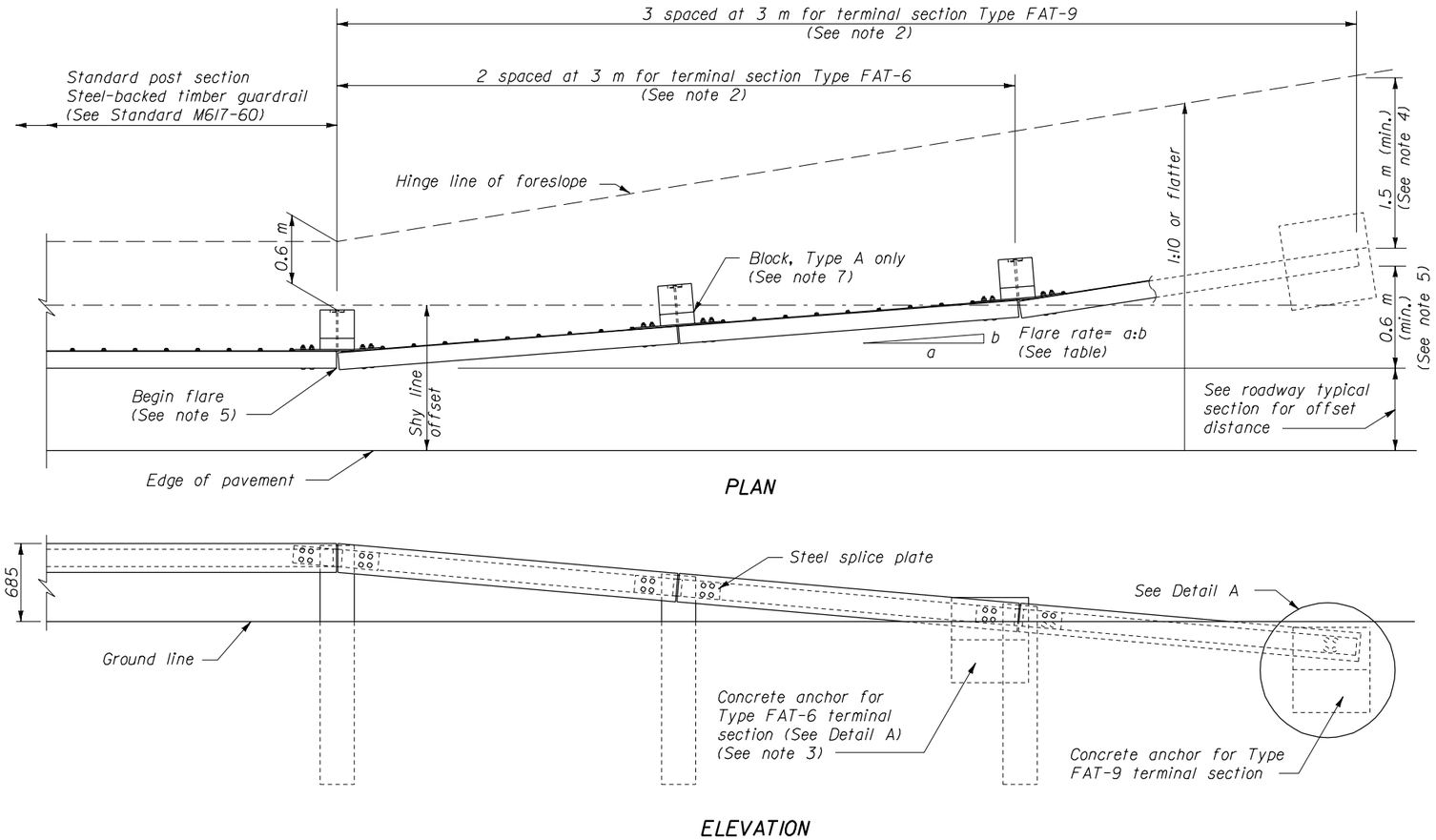

APPROACH & DEPARTURE FLARE WITH FLARED ANCHOR TERMINAL (FAT)

NOTE:

1. Dimensions not labeled are in millimeters.
2. Use 9 m long Type FAT-9 (Flared Anchor Terminal) terminal section or the 6 m long Type FAT-6 (Flared Anchor Terminal) terminal section as specified.
3. For the Type FAT-6 terminal section, the third rail on the Type FAT-9 terminal section is deleted and the concrete anchor is relocated to the end of the second rail. See Standard M204-1, Earth berm for Roadside Barrier Terminal Sections, for construction of the earth berm.
4. For the Type FAT-9 terminal section, extend the fill widening a minimum of 1.5 m behind the guardrail, unless otherwise directed by the CO.
5. The guardrail flare shown in the plan view is the minimum length and rate required. As directed by the CO, flare the guardrail so that the terminal section is outside the clear zone. If the terminal section cannot be located outside the clear zone, it should be flared as far as practical from the road at the maximum rate indicated on the Guardrail Flare Rates table.
6. See Standard M617-60, Steel-Backed Timber Guardrail, Type SBTA and SBTB, for timber, structural steel, and hardware details.
7. On the Type A, blocked-out guardrail, include the blocks in terminal section, except on the concrete anchor. For the Type B, non-blocked-out guardrail, no blocks are included.
8. Funish hardware in the metric sizes shown. Equivalent imperial sizes may be used when metric sizes are not available.

GUARDRAIL FLARE RATE TABLE

Design Speed (km/h)	Shy line offset (m)	Flare rate inside shy line (a:b)	Flare rate outside shy line (a:b)
100	2.5	26:1	13:1
80	2.0	21:1	11:1
60	1.5	17:1	9:1
50 or less	1.0	13:1	7:1

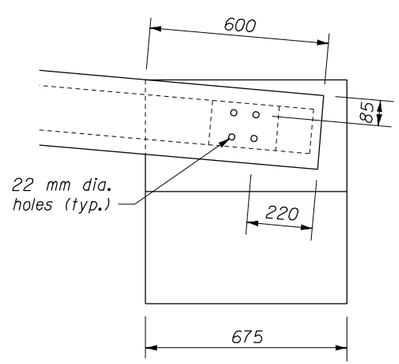

DETAIL A

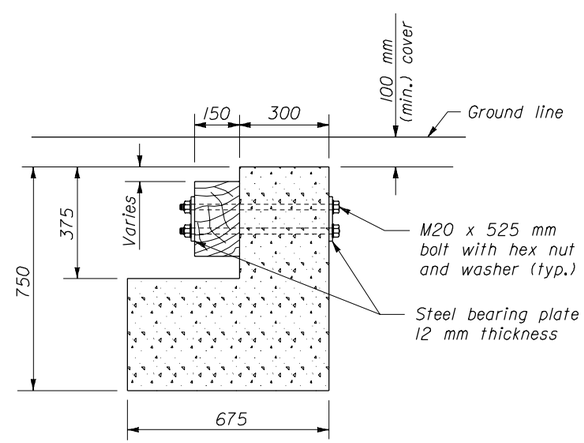

SECTION A-A

CONCRETE ANCHOR

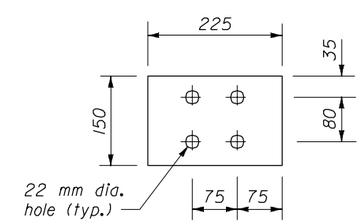

STEEL BEARING PLATE

NO SCALE

U.S. DEPARTMENT OF TRANSPORTATION
FEDERAL HIGHWAY ADMINISTRATION
FEDERAL LANDS HIGHWAY OFFICE

METRIC STANDARD

STEEL-BACKED TIMBER GUARDRAIL TERMINAL SECTION, TYPE FAT-9 AND TYPE FAT-6

REVISED:

STANDARD M617-61

MST617G1.DGN

REG	STATE	PROJECT	SHEET NO.	TOTAL SHEETS

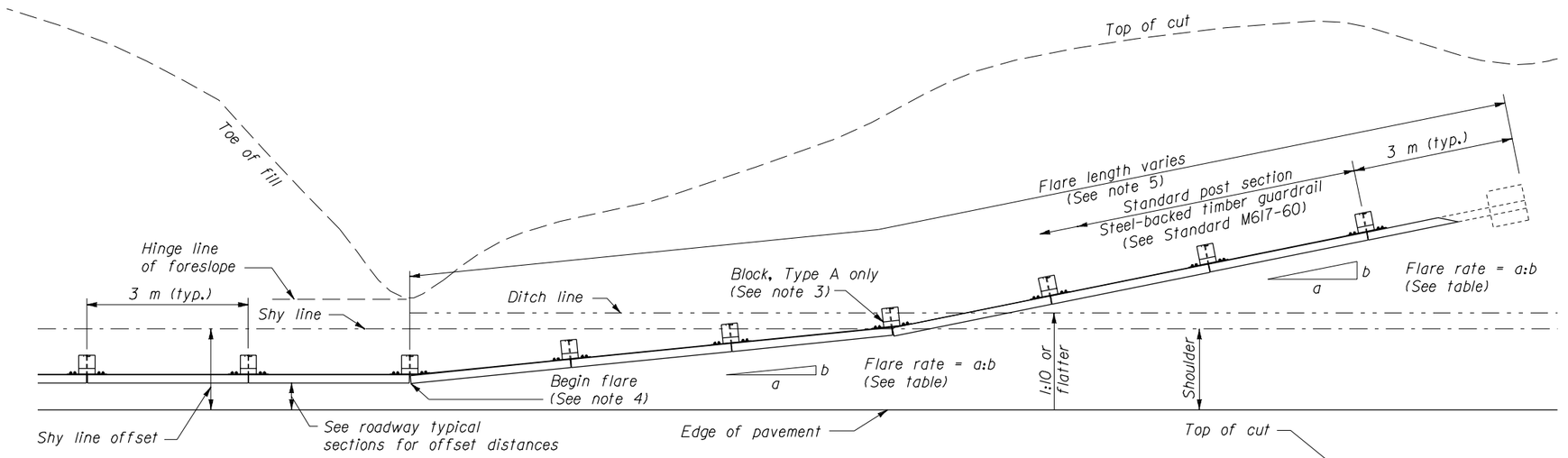

PLAN

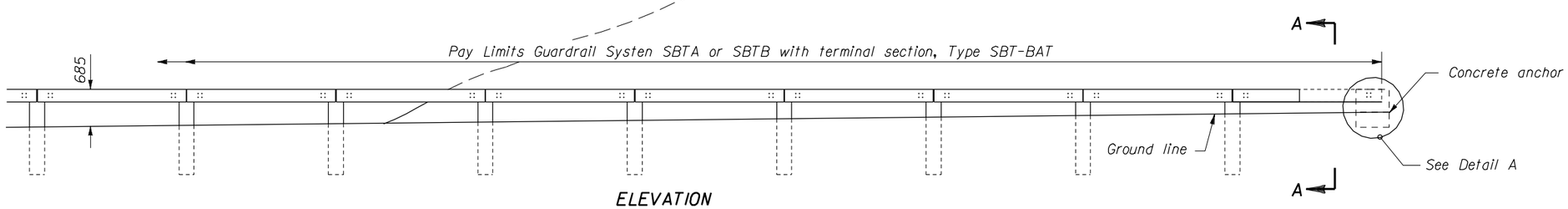

ELEVATION

APPROACH & DEPARTURE FLARE WITH BACK SLOPE ANCHOR TERMINAL (BAT)

NOTE:

1. Dimensions not labeled are in millimeters.
2. See Standard M617-60, SBTA and SBTB for timber, structural steel, and hardware details.
3. On the Type A, blocked-out guardrail, include the blocks in the terminal section, except on the concrete anchor. For the Type B, non-blocked-out guardrail, no blocks are included.
4. Begin the cut flares at the nearest post to a transition point between fill and cut as directed by the CO.
5. Extend the flare into the cut until a minimum 300 mm cover is obtained over the guardrail end.
6. Furnish hardware in the metric sizes shown. Equivalent imperial sizes may be used when metric sizes are not available.

GUARDRAIL FLARE RATE TABLE

Design Speed (km/h)	Shy line offset (m)	Flare rate inside shy line (a:b)	Flare rate outside shy line (a:b)
100	2.5	26:1	13:1
80	2.0	21:1	11:1
60	1.5	17:1	9:1
50 or less	1.0	13:1	7:1

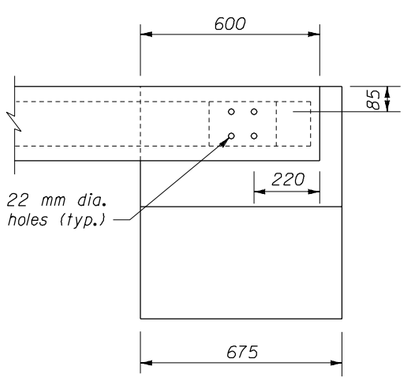

DETAIL A

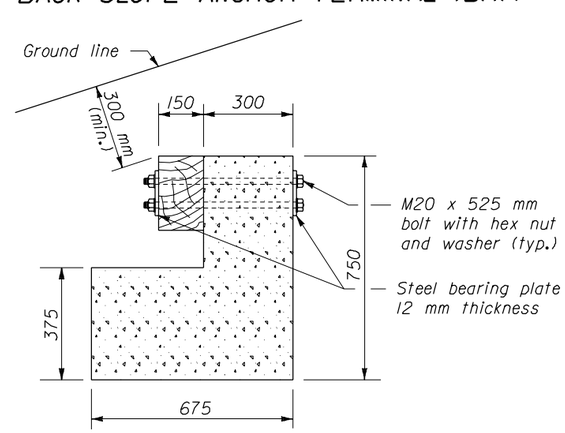

SECTION A-A

CONCRETE ANCHOR

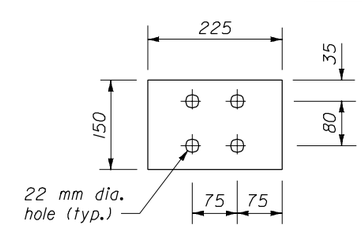

STEEL BEARING PLATE

NO SCALE

U.S. DEPARTMENT OF TRANSPORTATION
FEDERAL HIGHWAY ADMINISTRATION
FEDERAL LANDS HIGHWAY OFFICE

METRIC STANDARD

STEEL-BACKED TIMBER GUARDRAIL TERMINAL SECTION, TYPE SBT-BAT

REVISED:

STANDARD M617-62

MST617 62.DGN

REG	STATE	PROJECT	SHEET NO.	TOTAL SHEETS

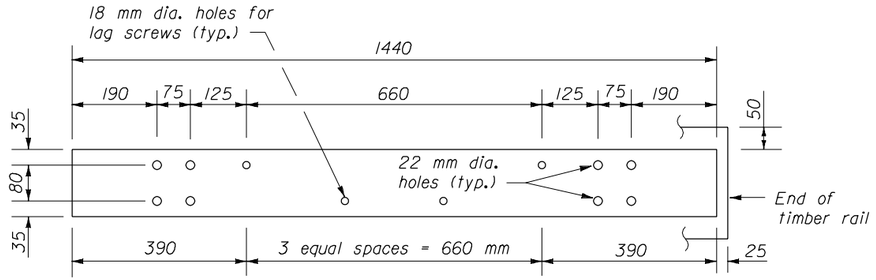

STEEL RAIL
150 x 10 x 1445 mm

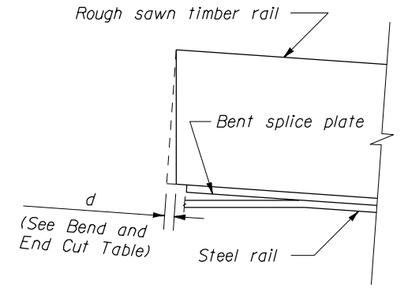

DETAIL A

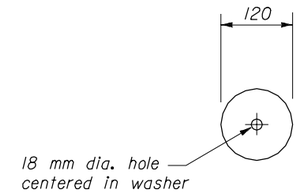

PLATE WASHER DETAIL
120 mm DIA. X 6 mm

NOTE:

1. Dimensions not labeled are in millimeters.
2. Use the Type A, blocked-out, system or the Type B, non-blocked-out, system as specified.
3. Use weathering steel for all structural steel and fastener hardware.
4. Furnish shop bent splice plates. Use the minimum bend angle shown in the table below.
5. Furnish hardware in the metric sizes shown. Equivalent imperial sizes may be used when metric sizes are not available.
6. See Standard M617-64 for Plan View Layout.

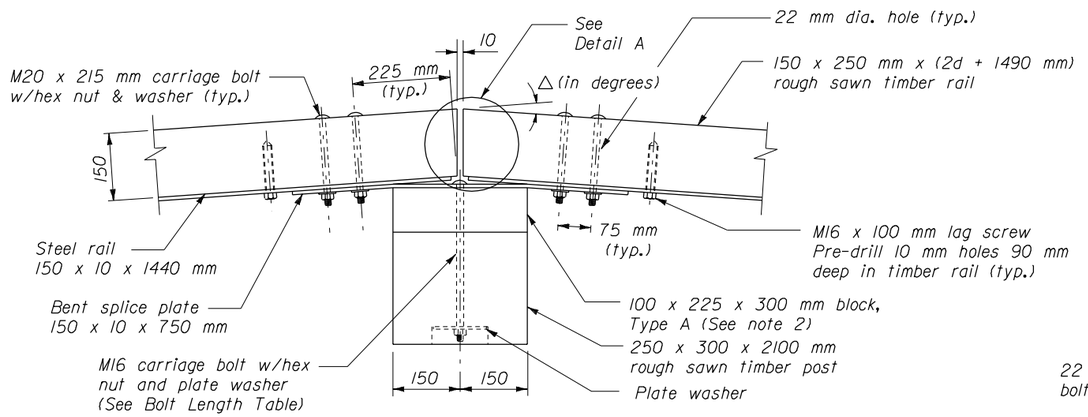

PLAN

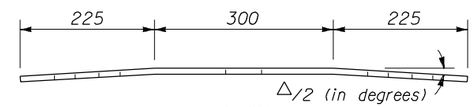

PLAN

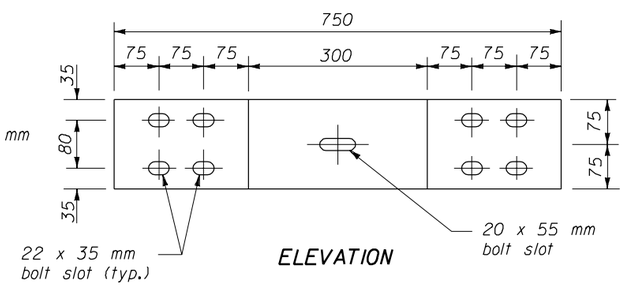

ELEVATION

BENT SPLICE PLATE
150 X 10 x 750 mm

BEND AND END CUT TABLE		
Radius R meters	△/2 (degrees)	d mm
5	8.63	23
8	5.38	14
10	4.3	11
12	3.58	9
14	3.07	8
16	2.69	7
18	2.39	6
20	2.15	5
22	1.95	5
over 22	flat	0

BOLT LENGTHS TABLE	
Type A (Block-out)	Type B (No Block-out)
375	275

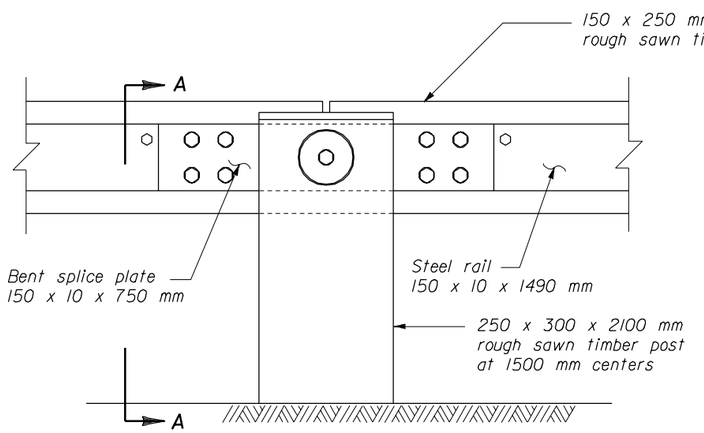

ELEVATION

POST CONNECTION

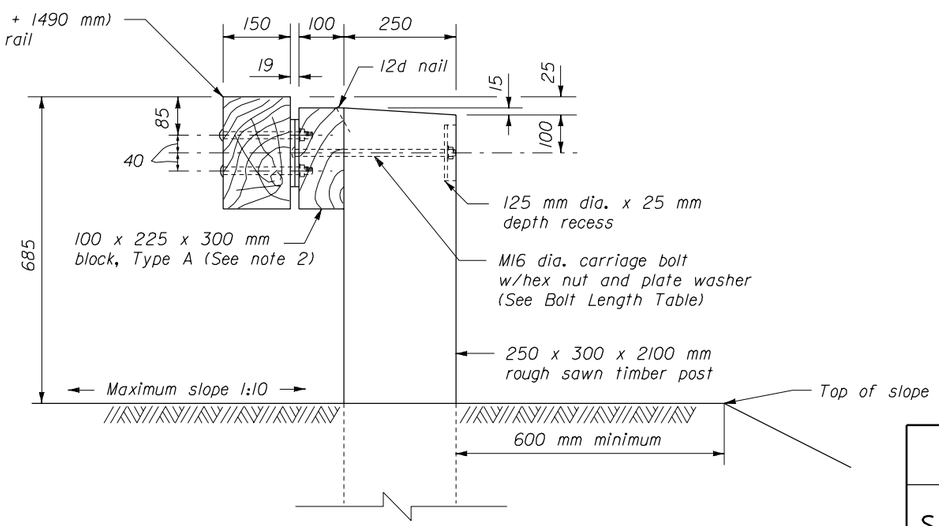

SECTION A-A

NO SCALE

U.S. DEPARTMENT OF TRANSPORTATION
FEDERAL HIGHWAY ADMINISTRATION
FEDERAL LANDS HIGHWAY OFFICE

METRIC STANDARD

STEEL-BACKED TIMBER GUARDRAIL AROUND CIRCULAR CURVES 22 M RADIUS AND BELOW

REVISED:

STANDARD M617-63

MST617G3.DGN

REG	STATE	PROJECT	SHEET NO.	TOTAL SHEETS

NOTE:

1. Dimensions not labeled are in millimeters.
2. Δ is the central angle which subtends a 1500 mm chord.
3. R is measured from the center of the circle to the back surface of the rough sawn timber rail.

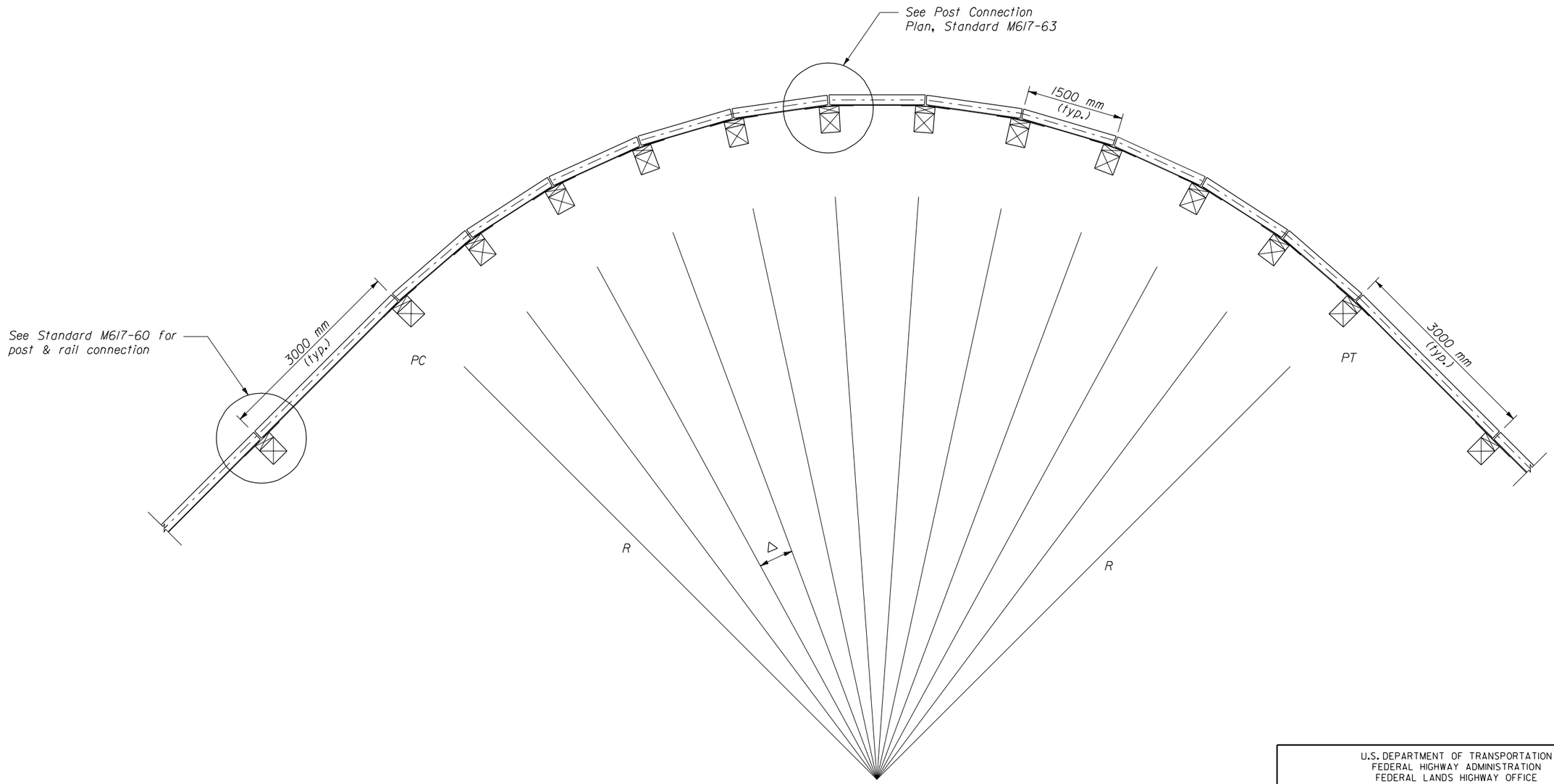

PLAN VIEW LAYOUT

NO SCALE

U.S. DEPARTMENT OF TRANSPORTATION
FEDERAL HIGHWAY ADMINISTRATION
FEDERAL LANDS HIGHWAY OFFICE

METRIC STANDARD

STEEL-BACKED TIMBER GUARDRAIL AROUND CIRCULAR CURVES 22 M RADIUS AND BELOW

REVISED:

STANDARD M617-64

MST6I764.DGN

REG	STATE	PROJECT	SHEET NO.	TOTAL SHEETS

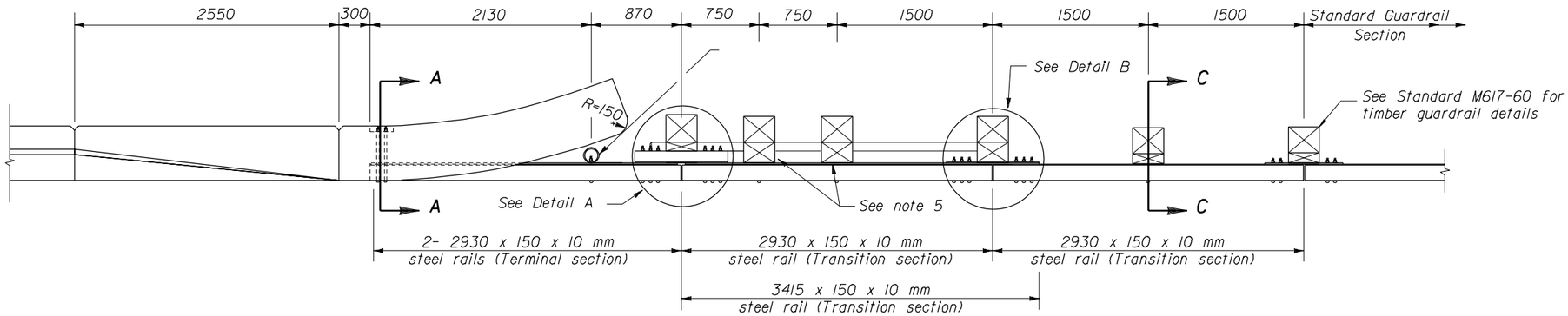

PLAN

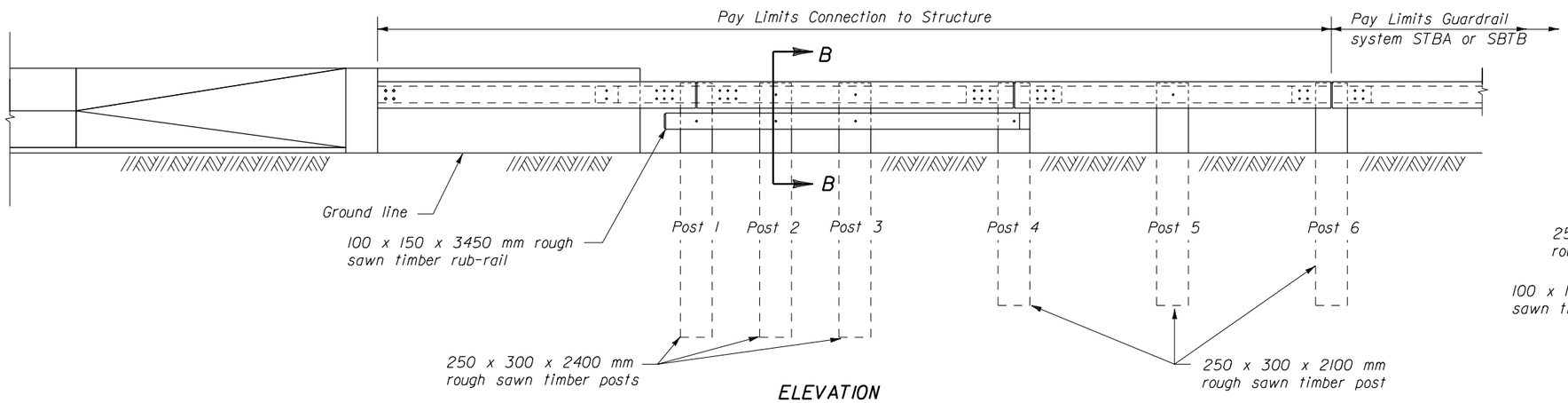

ELEVATION

NOTE:

1. Dimensions not labeled are in millimeters.
2. See Standard M617-66 for Sections A-A through C-C, steel rail layouts, and other details.
3. Use weathering steel for all structural steel and fastener hardware.
4. Drill the bolt pattern for structural steel tube to match the pattern for the splice plate shown on Standard M617-66.
5. For posts 2 and 3, use a 200 x 225 x 300 mm block for the blockout, and an M16 x 650 mm carriage bolt with hex nut and plate washer.
6. Furnish hardware in the metric sizes shown. Equivalent imperial sizes may be used when metric sizes are not available.

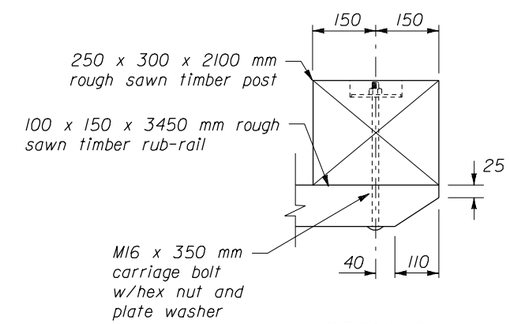

DETAIL C

RUB-RAIL CONNECTION

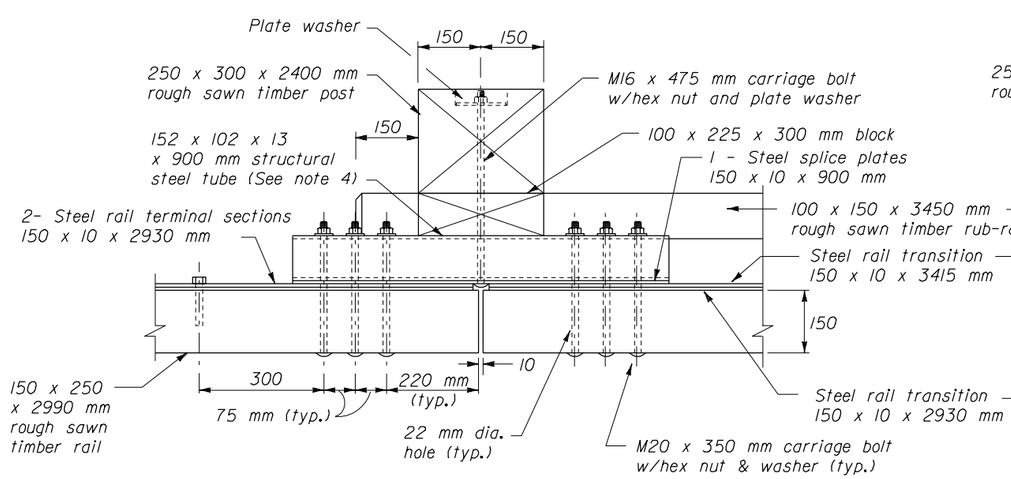

DETAIL A

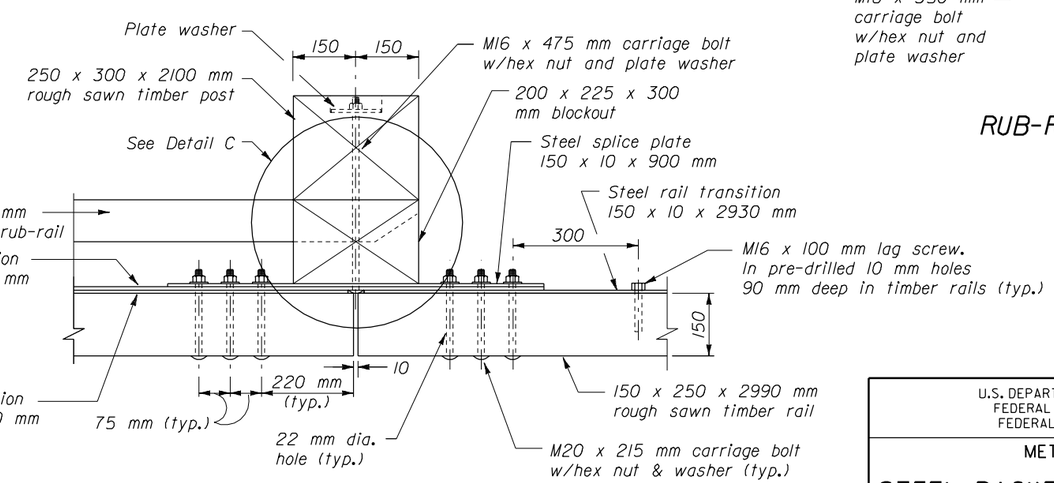

DETAIL B

POST CONNECTION

NO SCALE

U.S. DEPARTMENT OF TRANSPORTATION
FEDERAL HIGHWAY ADMINISTRATION
FEDERAL LANDS HIGHWAY OFFICE

METRIC STANDARD

STEEL-BACKED TIMBER GUARDRAIL CONNECTION TO STRUCTURE

REVISED:

STANDARD
M617-65

MST617 65.DGN

REG	STATE	PROJECT	SHEET NO.	TOTAL SHEETS

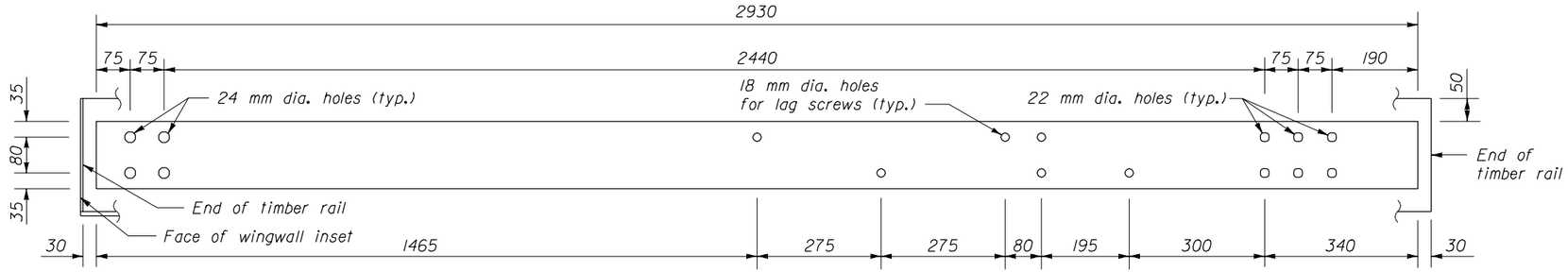

TERMINAL SECTION 150 x 10 x 2930 mm

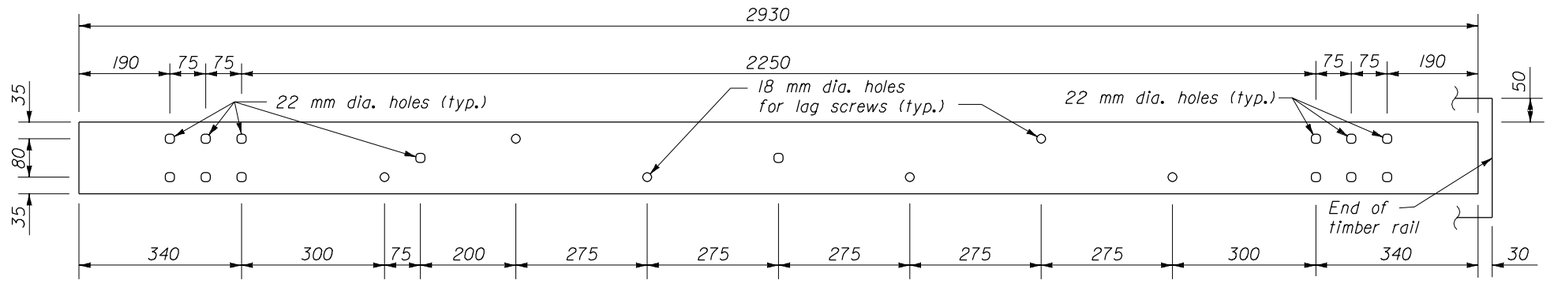

TRANSITION SECTION 150 x 10 x 2930 mm

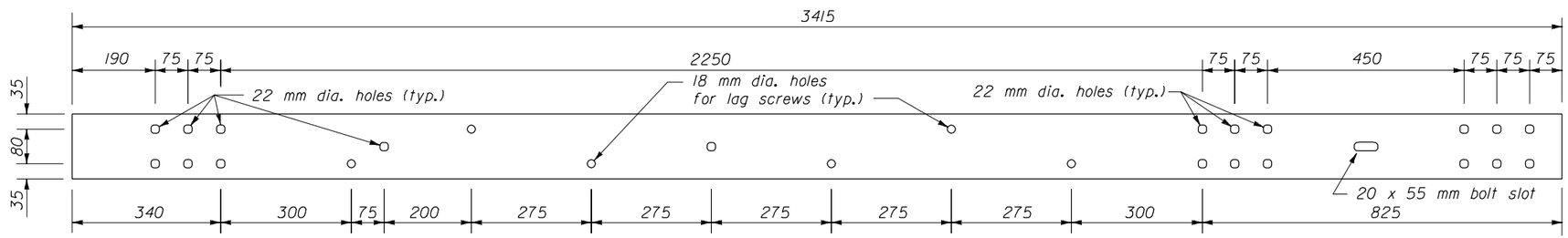

TRANSITION SECTION 150 x 10 x 3415 mm

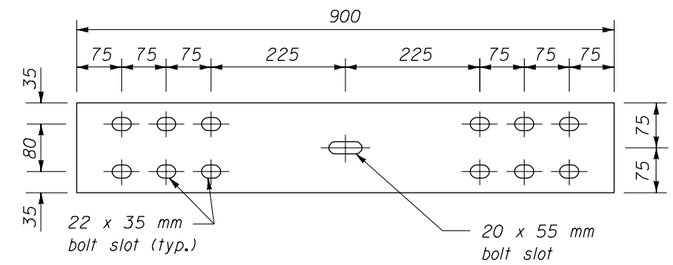

STEEL SPLICE PLATE
150 x 10 x 900 mm

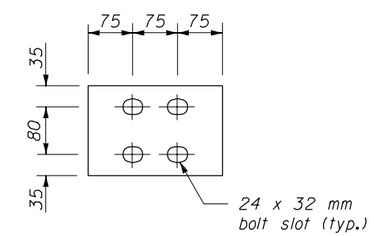

STEEL BEARING PLATE
150 x 10 x 225 mm

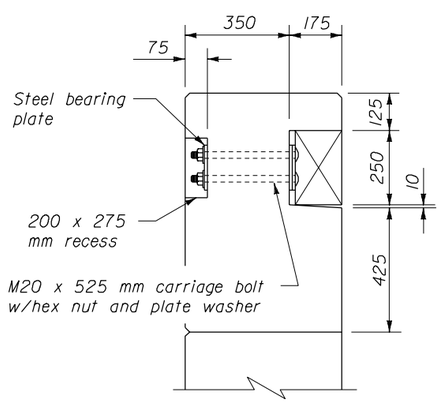

SECTION A-A

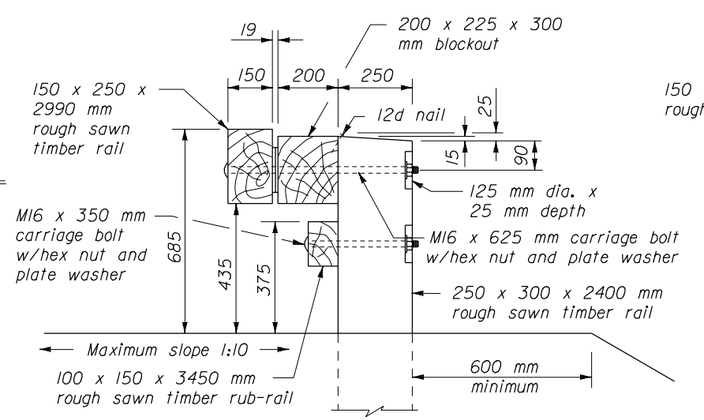

SECTION B-B

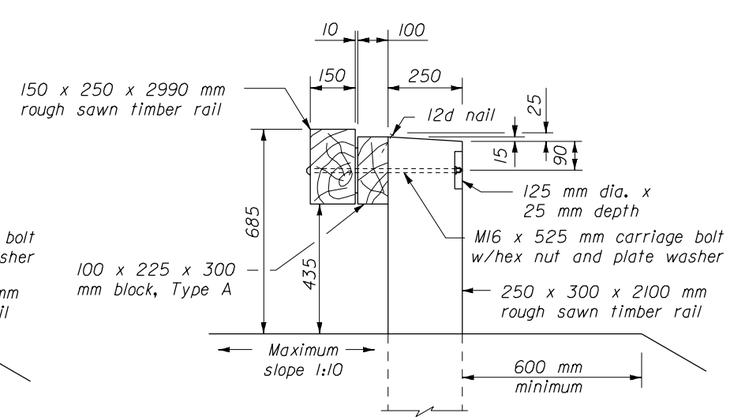

SECTION C-C

NOTE:

1. Dimensions not labeled are in millimeters.
2. Pre-drill 18 mm holes in blocks outs and posts.
3. Furnish hardware in the metric sizes shown. Equivalent imperial sizes may be used when metric sizes are not available.

NO SCALE

U.S. DEPARTMENT OF TRANSPORTATION
FEDERAL HIGHWAY ADMINISTRATION
FEDERAL LANDS HIGHWAY OFFICE

METRIC STANDARD

STEEL-BACKED TIMBER GUARDRAIL BRIDGE CONNECTION

REVISED:

STANDARD
M617-66

MST61766.DGN